A SYSTEM DYNAMICS APPROACH TO MODELING REACH-LEVEL INDICES OF STREAM QUALITY

Nora Hill and Aidan Villani-Holland

(Peter Goff, faculty advisor)

Vermont Commons School, South Burlington, Vermont

Introduction

We used data gathered from the Huntington River (RACC site WR_HntRv_536) to build a system dynamics model of the system using STELLA™[1]. Because water temperature and dissolved oxygen [dO_2] drive biological community structure[2,3], we used our model to better understand the interactions and feedbacks and test the following hypotheses:

Hypothesis 1: Air temperature positively affects water temperature[4]
Hypothesis 2: Turbidity (measured by Total Suspended Solids, TSS) positively affects water temperature[5]
Hypothesis 3: Water temperature negatively affects Dissolved Oxygen[6]
Hypothesis 4: Turbulence (measured by Velocity and Stage) positively affects Dissolved Oxygen[7]

Ideally, this model could be used by stakeholders to predict changes in water chemistry that, in turn, drive biodiversity and ecosystem stability. At the very least, the process of model-building allowed us to better understand this complex system.

Team and Site

Huntington, VT

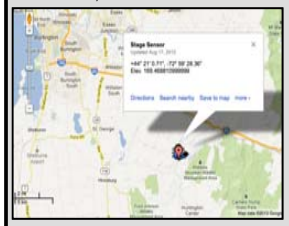

Huntington River, MW_HntRv_536

Sensor Placements

System Dynamics and STELLA™

Stella Tools:

Stock: A quantity of things; population, concentration of solutes, temperature, *etc…*

Flows: The change in the stock, flows control change in stocks. The direction of the arrowhead indicates flow. The 'cloud' icon associated with many flows indicate quantities that are entering or leaving the system. The double-headed flows are 'biflows', when the value is negative, the quantity flows in the direction of the filled arrowhead (and vice-versa).

Converters: Variables that effect stocks and flows (fractions, rates, proportions, *etc.*)

Connecters: The mathematical relationship between the above terms.

BOTG: In the panel to the right, the yellow graphs are the primary output from a model, the Behavior Over Time Graph.

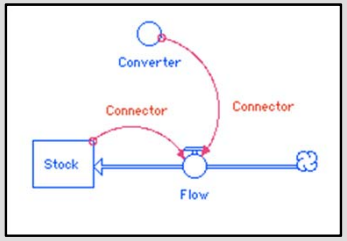

Layers: Below is the Model/Map layer, where the model construction happens. The BOTGs are from the stakeholder's layer, the Interface. The modeler creates controls in the Interface which allows the stakeholder to modify the system before and after a 'run'.

Model

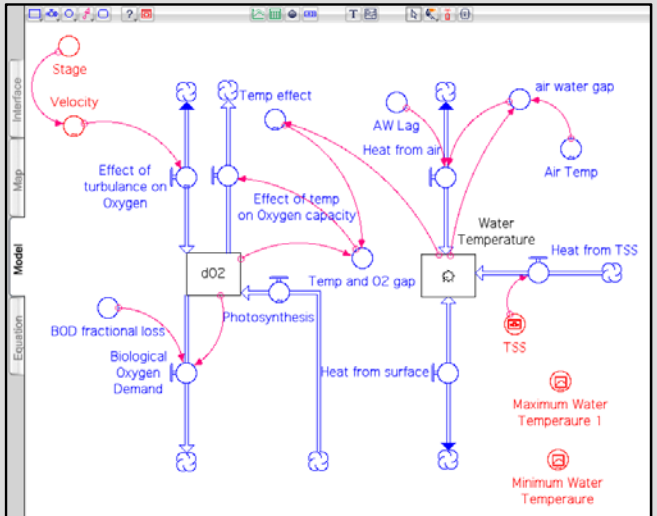

-Red tools are based on RACC-collected field data
-The black stocks are the main drivers of community stability and biodiversity

Results

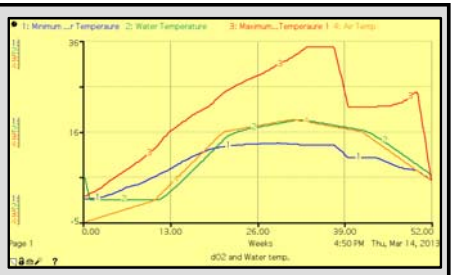

This BOTG shows our model's predicted water temperature (green line) falling in between min. and max. water temperature. Our model supports Hypothesis 1, as shown by the green line's close association with the orange line (air temperature). Hypothesis 2 was not supported; these results were not shown on the graph above because the TSS line obscures all other data. The minimal affect of TSS on water temperature was obscured by air temperature.

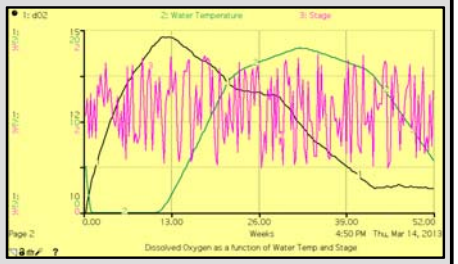

The BOTG (right) showing that dO_2 (black line) is driven by water temperature (green line) and that stage (oscillating pink line) has minimal effect. This supports Hypothesis 3 and does not support Hypothesis 4

Conclusion & Next Steps

We found that air temperature is the driving force in driving biological community structure. Therefore, environmental effects such as climate change could have immense effects on stream systems.

Future modeling efforts will include;

- examining the discrepancy between our model and reality at low-temperature end of the spectrum (see the top BOTG in the early weeks, January & February).
- incorporating rare storm events
- including specific chemical components (Phosphorous, etc…)

References

(1) http://www.iseesystems.com/softwares/Education/StellaSoftware.aspx
(2) http://www.mendeley.com/catalog/trends-macroinvertebrate-community-structure-glacier-fed-rivers-relation-environmental-conditions-sy/
(3) http://www.esajournals.org/doi/abs/10.1890/0012-9658%282001%29082%5B3390:IAEOCR%5D2.0.CO%3B2
(4) http://www4.uwsp.edu/geo/faculty/ritter/geog101/textbook/energy/energy_balance.html
(5) http://www.a2gov.org/government/publicservices/systems_planning/Environment/soe07/cleanwater/Pages/TotalSuspendedSolids.aspx.
(6) http://www.newton.dep.anl.gov/askasci/chem03/chem03334.htm
(7) http://www.lakeaccess.org/russ/oxygen.htm.

Acknowledgements

We would like to thank Dr. Donna Rizzo (UVM, CEMS) and Mikhal Yudien (VCS, '15) for field and modeling assistance.
Katie Chang of VT-EPSCoR was an absolutely invaluable resource throughout this entire program.

This work was wholly supported by the Research into Adaptations to Climate Change (RACC) program (NSF Grant EPS-1101317)